Production Technology
Electrical Energy
Electrical Circuits – Part 1 in a Series of 4
Activity 37 — Simple Circuits & Ohm's Law

Technology Education SA
Instructor: RM Schoen

Estimated Completion Time: 2 - 50 min Periods
Designed for use in High School

I. Overview: Students will review Ohm's law, set up a simple circuit, and take and record various electrical measurements.

II. Learning Outcomes — Upon completion of this activity, the student will develop competence in:

Cognitive Learning —

- understanding Ohm's law, and how voltage, current, and resistance are interrelated.
- how to read, and implement a schematic diagram
- knowing the various electrical symbols used in electricity
- Learn how to use digital and analog measuring equipment.

Practical Experience — The relationship between desk-top electrical circuits and common household wiring is very high, thus the skills learned can easily be transferred to practical wiring including homes and automobiles.

Reinforcement of Academic Skills —

- Mathematics: Ohm's Law involves the use of common arithmetic.
- Language Arts — Reading instructions to implement the project.

III. Background Reading —

Included sheets

IV. Equipment/Materials Needed:

6-volt battery, (or power supply); light socket; power resistor; light bulb, 12 volt; knife switch; battery rheostat; wire leads; voltmeter, 0 - 15 volts; milliammeter, 0 - 500 ma.

V. Electrical Theory —

Note: *Italicized* words are key words whose definitions you will be held responsible plus the concepts that follow.

Introduction — Because electricity is often mystifying to many individuals, the study of electricity is often analogized with pressurized water systems since they are easier to understand. Water can be "seen", and while most people have experienced the behavior of water in their own homes, the connection to electricity becomes more comprehendible.

Theory: Science courses teach that all matter is made of *atoms* — the smallest part of matter, and that atoms are made up of three fundamental particles: protons, electrons, and neutrons. Protons have a positive (+) charge, electrons a negative (−) charge, and neutrons have no charge. You probably learned that *like charges repel (++ or −−), and unlike charges attract (+ −).* It is solely this concept that moves charges through *conductors* such as wires. Thus the *electron theory,* which states that it is the electrons

Production Technology
Electrical Energy
Electrical Circuits – Part 1 in a Series of 4
Activity 37 — Simple Circuits & Ohm's Law

that passes through a wire, similar to water passing through a pipe.

1. **Water Systems vs Electrical Systems:** In order for water to flow through a pipe, there must be a difference in pressure between two points — typically before and after the faucet. For example, in order for water to flow out of your faucet, water pressure must be higher before the faucet, and lower after the faucet. The following is an analogous comparison of water systems to electrical systems.

Water Systems	Electrical Systems
Water Pressure is defined as the force (push) on an area. A pressure of 60 lbs per square inch is common for city water pressure. This is the force that pushes water through a pipe. The higher the pressure, the faster the water will flow.	**Electrical Pressure** is the force that pushes electrons through a conductor. Electrical pressure is called *potential difference* and is measured in *volts, (v)*. The higher the potential difference, the faster the electrons flow.
Water Flow — Refers to how fast the water flows through a pipe. It can be measured in gallons per minute. Water meters are used to measure flow rate.	**Electron Flow** is the rate at which electrons flow through a conductor. This is called *current* and is measured in *amperes* or more commonly, *amps (A)*. Current direction is from negative to positive. Ammeters measure current
Water Resistance refers to that which will slows the flow of water. A kink in a hose; a faucet turned partly off (or on). The higher the resistance, the slower the water flows.	**Electrical Resistance** refers to that which will slow the flow of electrons (current) in a conductor (wire). Devices that do this are called *resistors*. A resistor can be a really fine wire wrapped around a core; a material that naturally has high resistance such as carbon, Nichrome wire, and semi conductors. Resistance is measured in *ohms*, Ω.
The "Ohm's Law" of a Water System — If the water pressure is increased, water will flow faster; if the resistance is increased, water will flow slower.	**Ohm's Law** — If the potential difference in a *circuit* is increased, the current in the circuit will increase; if the resistance in the circuit is increased, the current in the circuit will decrease. Resistance is measured in *ohms*. If I is current in amperes, E is potential difference in volts, and R is resistance in ohms, then *current = potential difference/resistance.*
Devices that Produce Water Pressure — water pump;	**Devices that Produce Potential Difference** — Generator, ac or dc; dry cell or battery, solar cell

Note: Often times people refer to potential difference as **voltage**, and current as **amperage**. Please keep this in mind in discussions. They will often be interchanged.

Production Technology
Electrical Energy
Electrical Circuits – Part 1 in a Series of 4
Activity 37 — Simple Circuits & Ohm's Law

2. **The simple Circuit** — def: A closed path for electrons to travel. 'B' is called the *source of potential difference* or in common terms, the voltage supply, and the symbol shown is for two or more *cells* as in batteries. 'R' is the symbol for a resistance. The current direction is clockwise. The long line of the *battery* symbol is always positive (+) thus the short line is always negative. Other components may be added to a circuit such as a switch, an ammeter, voltmeter, a fuse, etc.

3. **Ohm's Law** – *If the potential difference (voltage) is increased, the current will increase, assuming the resistance is kept constant. If the resistance in a circuit is increased, the current will decrease, assuming the potential difference is kept constant.*

   Translation: When the "electrical pressure" is increased, the flow of electrons will increase, and if the resistance in a circuit is increased, the flow of electrons will slow down.

$$I = \frac{E}{R}$$

Ohm's Law can also be written in mathematical terms – where R = resistance in *ohms*; E = potential difference in *volts*, and I = current in *amperes*. "*E*" is used because voltage or potential difference is also called "electromotive force."

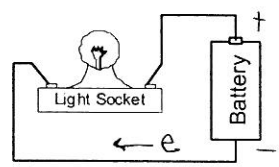

Figure 1

Note: In each of the examples that follow, please observe the way the work is shown in solving each problem. It is imperative that when your are solving electical problems such as the ones that follow, that you also show your work in exactly the same format – Formula – values plugged in – and the answer. Each quantity should have the proper units attached as seen below.

a. **Example 1**: Find the current in amps of a circuit that has an applied voltage of 30 volts and a resistance of 15 Ω. Remember, the Greek letter Omega stands for ohms. Using the three-step method,

$$R = \frac{E}{I}; \quad R = \frac{30\,v}{15\,\Omega}; \quad R = 2\,A$$

b. **Example** 2: Find the resistance in a circuit if the applied voltage of 75 volts produces a current if 5 amps.

$$R = \frac{E}{I}; \quad R = \frac{75\,v}{5\,A}; \quad R = 15\,\Omega$$

c. **Example 3**: Find the potential difference (voltage) across a resistor if the current through that resistor is 12 amps and the resistance of that resistor is 5 Ω.

$$E = IR; \quad E = 12\,A \times 5\,\Omega; \quad E = 60\,v.$$

Production Technology
Electrical Energy
Electrical Circuits – Part 1 in a Series of 4
Activity 37 — Simple Circuits & Ohm's Law

5. The following represent some of the few instruments used to measure electricity. Please read carefully even if it involves going back to read it over again. Refer to **Figure 2** for the voltmeter and ammeter configurations.

Devices That Measure Electricity and How They're Connected Together

a) **The Voltmeter** — This device measures potential difference (or voltage). The voltmeter has virtually an infinite resistance thus hardly any current passes through this device — just enough to run the meter. **It is always connected in PARALLEL across the circuit element being measured.** Your instructor will explain this on the board with diagrams. Most meters are constructed to measure either volts, millivolts. The only way they can be destroyed (besides physical abuse) is to apply a larger potential difference (or voltage) than the maximum reading of the meter. The symbol for potential difference is *E*, and the units symbol is 'v'.

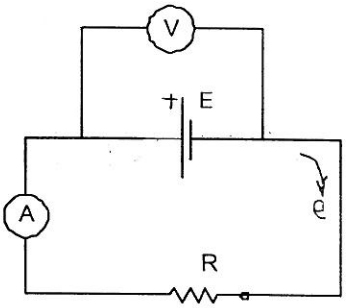

Figure 2

b) **The Ammeter (or milliammeter)** — This device measures — the rate of electron flow through a conductor (or circuit), in amperes (amps) or multiples such as kiloamps (1000 amps), megamps (1,000,000 amps), or fractions such as milliamps (1/1000 amp); microamps (1/1,000,000 amps). **Ammeters are EASILY destroyed if improperly wired in the circuit. Ammeters are ALWAYS placed in a circuit in <u>series</u>** which means the current (electrons) must pass *through* the ammeter. The ammeter has virtually zero resistance. This means that if placed directly across a battery or other voltage source, a short circuit will occur and permanent damage will occur to the ammeter (unless it's protected by a fuse). It must **never** be placed in parallel with any circuit element – voltage source or whatever. Your instructor will demonstrate this on the board. The symbol for current is *I*, while the units symbol is 'A'.

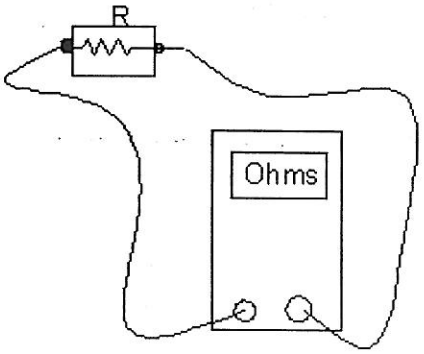

Fig 3: Measuring Resistance

c) **The Ohmmeter** — This device measures the resistance of a resistor, usually while the resistor is NOT in the circuit. Ohmmeters usually have a small battery in the meter to send a small current through a resistor. Typically the ohmmeter is part of a multifunction meter sometimes called a multimeter that reads a host of measurements depending on which one is purchased. Resistance is measured in ohms or multiples such as kiloohms (1000 ohms), megohms (1 million ohms). Fraction of ohms is milliohms, 1/1000) or microohms (1 millionth of an ohm). The symbol for resistance is *R*. The units symbol is the Greek letter omega, Ω.

5. Complete the following worksheet **before** hooking up any circuits. Failure to do so will probably destroy some equipment especially ammeters.

Production Technology
Electrical Energy
Electrical Circuits – Part 1 in a Series of 4
Activity 37 — Simple Circuits & Ohm's Law

Worksheet: Simple Circuits & Ohm's Law

Perform the indicated exercises, and return them to your instructor before proceeding. If time permits during the period, this worksheet will be corrected in class. Answers for each questions below may be found in the text that precedes this worksheet.

Name _____

1. In the box at the right, draw a simple circuit, similar to Figure 2, on Page 4 showing a 5-Ω resistor, a 15-volt battery with an ammeter, a knife switch and voltmeter properly placed in the circuit. **Be sure to label each element!**

2. Calculate the *current* in the circuit showing your work below. Use the three-step approach as seen in the examples on Page 3.

Figure 4

In problems 3, 4, and 5, name *units* in words for each of the quantities below:

3. Current ..... _____
4. Resistance ..... _____
5. Potential difference ..... _____

In problems 6 thru 8, write the *units symbols* for each of the following quantities. (Do not use the formula symbols.)

6. Current ..... _____
7. Resistance ..... _____
8. Potential difference ..... _____

9. What letter is used in Ohm's law to represent voltage? ..... _____

10. For all practical purposes, how much resistance do the following meters have –
    a. volt meter? ..... _____
    b. ammeter? ..... _____

11. Which of the two meters above are easily destroyed simply by placing a small voltage across terminals? ..... _____

12. Ohm's law states that if the resistance is increased in a circuit, the current will _____, while if the voltage is increased & resistance kept constant the current will _____

13. Write how you would measure the resistance of a resistor using an ohmmeter. _____

Production Technology
Electrical Energy
Electrical Circuits – Part 1 in a Series of 4
Activity 37 — Simple Circuits & Ohm's Law

Worksheet: Simple circuits & Ohm's Law, Cont.

Name _____

Using Ohm's Law, solve for the unknown quantities in each of the problems below. Be sure to use the 3-step process as illustrated on Page 3. All problems below reference Figure 2 at the right.

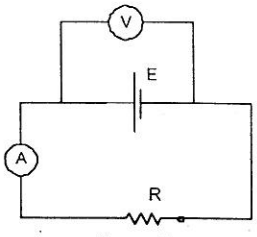

Figure 2

14. Compute the current in a circuit which has an applied potential difference (voltage) of 30 volts and the resistance in the circuit is 6 Ω. Show all three steps below.

15. Find the voltage in a circuit which as a resistance of 25 Ω and a current passing through the circuit is 7.5 amps.

16. What resistance would be required in a circuit if a potential difference (voltage) applied is 50 volts and the current in the circuit is 2.5 amps?

17. What would be the resistance of your car radio if the current that you measured with a Fluke multimeter read 2.3 amps?

18. In a 120 volt household circuit, how much current would travel through a 100 Ω resistor?

Production Technology
Electrical Energy
Electrical Circuits – Part 1 in a Series of 4
Activity 37 — Simple Circuits & Ohm's Law

VII. Hands-On Procedure:

Caution: You must have your circuit inspected and signed off by your instructor BEFORE plugging in a power supply or applying any voltage. Failure to do so could damage some equipment such as the ammeters. Note: The word "ammeter" is NOT pronounced as amp meter – there is no 'p' in ammeter!

A. A simple circuit using a small light bulb.

1. Set up a simple circuit using an open knife switch, light socket and bulb, voltmeter, ammeter, and wire leads, following the in figures 4 or 5. Be sure the power supply is turned to its minimum setting.

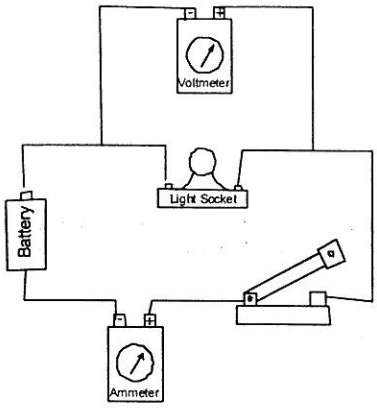

Figure 4: Pictorial

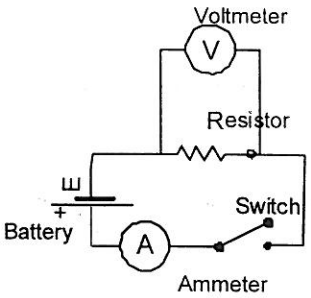

Figure 5: Schematic

2. At this point, obtain your instructor's signature on the Activity Sheet Page 9. DO NOT proceed any further until this is done!

3. Using a 6-volt battery, (or a power supply, and crank up some voltage such that the voltmeter reads 10-volts), close the knife switch. The bulb should light up, and the ammeter should have a reading somewhere between 0 and max. If you are using a power supply, make sure you turn the knob counterclockwise to zero. If the voltage is more than six, you may burn out the bulb and/or the ammeter. **Caution: make sure the knob is fully counterclockwise before plugging power supply in!**

4. Record the voltmeter reading to nearest 1/10 of a volt, and record the ammeter reading in milliamps. Transfer these readings to Activity Sheet SA-37, under VIIA4.

5. Using Ohm's Law, calculate the resistance of the bulb. You must show all work on Activity Sheet SA-37 below under VIIA5.

6. Pull the bulb and socket assembly from the circuit and measure the resistance of the bulb using an ohmmeter. Record results in part VIIA6 of Activity Sheet SA-37 on Page 9.

7. Now proceed to answer the questions in part VIIA7 of the Activity Sheet SA-37 on Page 9 BEFORE moving on to the next part.

B. Simple Circuit Using a Power Resistor —

Use the circuit diagrams under Part "A" above.

1. Set up the circuit following the schematic diagram above using a power resistor instead of a light socket. Be sure the voltmeter and ammeter are in the circuit.

2. Have it checked by your instructor before applying any power, and have is signed on the Activity Sheet on Page 9 under VIIB1 before proceeding.

Production Technology
Electrical Energy
Electrical Circuits – Part 1 in a Series of 4
Activity 37 — Simple Circuits & Ohm's Law

3. Record the resistance of the resistor printed on the resistor and record in Section VIIB3 on Page 9 (or 10).
4. If you are using a battery, close the knife switch and proceed to Part 6 below.
5. If you are using a power supply, make sure the control knob is set at its lowest position – fully counterclockwise. With the power turned on, crank in some voltage making sure both voltmeter and ammeter are between minimum and maximum readings as you crank.
6. Record the voltmeter reading to nearest 1/10 of a volt and transfer this reading to Activity Sheet SA-37, under VIIB6. This means, for example 9.3 volts.
7. Using Ohm's Law, calculate the resistance of the bulb. You must show all work on Activity Sheet SA-37 below under VIIB7.
8. Pull the resistor from the circuit and measure the resistance of the resistor using an ohmmeter. Be careful, the resistor could be hot. Record results in part VIIA8 of Activity Sheet SA-37.
9. Now proceed to answer the questions in part VIIB9 of the Activity Sheet SA-37 below BEFORE moving on to the next part.

C. Simple Circuit Using a Rheostat (variable resistor) —

1. Set up the circuit below following the schematic diagram below replacing the power resistor with a rheostat — a variable resistor. Be sure to place a voltmeter and ammeter in the circuit.
2. At this point, obtain your instructor's signature on the Activity Sheet below under VIIC2. Do not proceed until this is done.
3. Set the rheostat to MAXIMUM resistance. This will produce the smallest current. **You <u>will</u> need some help determining this position. Get HELP!**

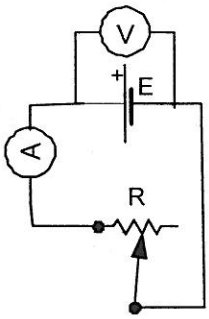

Fig 6: Rheostat

4. If you are using a battery, simply close the knife switch and proceed to Part 6.
5. If you are using a power supply, adjust the control knob to minimum, which is the extreme counterclockwise position. Plug in power supply. Now crank in some voltage so that you obtain about center-scale reading of the ammeter and/or voltmeter.
6. Record the voltmeter and ammeter readings on the SA-37 activity sheet below.
7. Now adjust the rheostat to maximum resistance (lowest current), and adjust the power supply to maintain about the SAME voltage as you increase the resistance. Record the voltmeter and ammeter readings when you reach the final settings on SA-37.
8. Answer the questions on SA-37 under VIIC-7

Production Technology
Electrical Energy
Electrical Circuits – Part 1 in a Series of 4
Activity 37 — Simple Circuits & Ohm's Law

Student Activity Sheet SA-37

Student Name _____ Date Started _____

Partner Name(s) _____

The following is to be completed and turned in by EACH of the members of the group. **Do not copy each other's Student Activity Sheets. It must be in your own words.** If papers show signs of copying, the points will be divided between the members and it will be at the discretion of the instructor! Instrument readings, obviously will be the same.

VII. Procedure — Calculations & readings from part VII above.

A. A simple circuit using a small light bulb – Each of the line numbers below correspond with the numbers in the instructions.

2. Instructor's Signature _____

4. Voltmeter Reading ..... _____ volts (nearest tenth)

   Milliammeter Reading ..... _____ ma.

5. Calculations:
   a) Convert the milliammeter reading to amps. Show work below. Remember, 1000 milliamps equals one ampere.

   = _____ amps.

   b) Using Ohm's Law, calculate the resistance of the light bulb. Be sure to use the three-step process:
   $R = \frac{E}{I}$; $R = \frac{(your\ voltmeter\ reading)}{(your\ ammeter\ reading)}$; R = Your answer including units.
   Always write units after every value Show work below.

   Calculated Resistance: ..... _____ Ω

6. Remove the lightbulb from the circuit and measure the resistance using an ohmmeter. Measured resistance of the light bulb is ..... _____ Ω

7. Give an educated guess as to why the measured resistance of the light bulb differed from the calculated resistance?

   _____

Production Technology
Electrical Energy
Electrical Circuits – Part 1 in a Series of 4
Activity 37 — Simple Circuits & Ohm's Law

B. A Simple Circuit Using a Power Resistor —

2. Instructor's Signature _____

3. Resistance printed on resistor ..... _____ Ω.

6. Meter Readings:

   a) Voltmeter reading ..... _____ volts.

   b) Milliammeter Reading ..... _____ milliamperes.

7. Calculations: Using Ohm's law, calculate the resistance of the power resistance. Be sure to use the three-step process for your calculations.

   Calculated resistance ..... _____Ohms.

8. Measured Resistance using an ohmmeter. ..... _____ Ohms.

9. Questions

   a) Record the resistances found in parts 3, 7, & 8: ... _____Ω; _____ Ω; _____Ω.

   b) How "should" these three values compare? _____

   c) Why were there differences? _____

C. Simple Circuit Using a Rheostat (variable resistor) —

2. Instructor's Signature: _____

5. Meter Readings:

   a) Ammeter Reading ..... _____ milliamps.

   b) Voltmeter Reading ..... _____ volts.

7. Questions:

   a) As you increased the resistance of the rheostat, what happened to the current? _____. Therefore, if the voltage is kept constant, and the resistance is increased, the current will _____.

D. Oral Questions by Instructor (10 pts) ..... _____ pts.

VIII. Instructor's signature at TIME of TURN-IN _____ Date_____

Instructor will now ask you some questions concerning what you learned in this activity. The score for these questions will be recorded in the grade book directly.

IX. What To Turn In — Activity Sheet SA-37 and the worksheet on Page 5. Do not turn in the information sheets — keep them for your record, and to study for a test.

18
24
19
61

INTRODUCTION TO TECHNOLOGY NAME Schoen

SCHOEN 61 + 5 for perfect paper DATE 9/27/99

Quiz -- Ohm's Law

3 each

Matching -- Problems 1 - 5. Responses may be used more than once, or not at all. Select the proper units for each of the measurements: (3 points each)

f	1.	Potential difference	a. Ohms
a	2.	Resistance	b. watts
d	3.	Current	c. joules
f	4.	The electrical unit that's analogous to water pressure	d. amperes
d	5.	The electrical unit that's analogous to flow rate	f. volts
a	6.	The electrical unit that's analogous to "a kink in the hose"	g. maxwells

18

Fill-In-The-Blank — (4 points each)

increase	7.	If the voltage of a circuit is increased (and all other variables kept constant), the current will (increase, decrease)
decrease	8.	If the resistance in a circuit is increased, the current will (increase, decrease)
E/R R=E/I, E=IR	9.	Write the formula for Ohm's Law. You may use any one of the three.
24	10.	Write the symbol used in schematic diagrams for a cell (or battery). Do not use a letter or a picture.
	11.	Write the symbol used in schematic diagrams for resistance. Do not use a letter, or a Greek letter.
— +	12.	The direction of the current is from the ____ to the _____. (+, -)

5 12. Draw a pictorial or schematic diagram of a circuit that contains a battery (or cell), one resistor, a knife switch, ammeter, and voltmeter, in the box below. (5 points)

6 a) Label each element in the circuit by writing the full name next to that element — no abbreviations (1 point each, 6 points)

2 b) Assign a fictitious value for two of the three unknowns in the schematic diagram. (2 points)

6 13. Using Ohm's Law, solve for the last unknown using the values you assigned to your schematic diagram. **The three-step process must be observed.** (6 points)

19 E = IR

Substitute

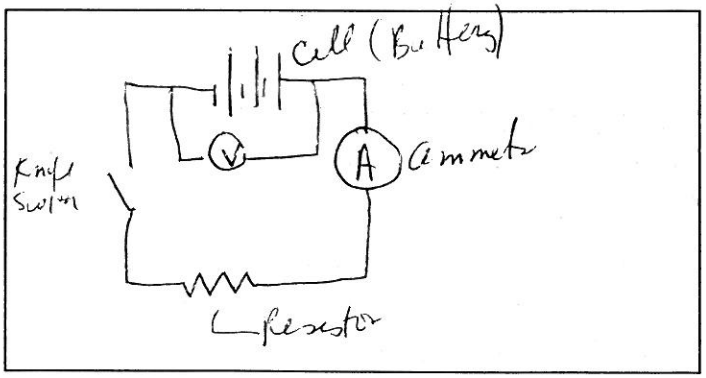

INTRODUCTION TO TECHNOLOGY NAME _____

SCHOEN DATE _____

Quiz -- Ohm's Law

Matching -- Problems 1 - 5. Responses may be used more than once, or not at all. Select the proper units for each of the measurements: (3 points each)

_____ 1. Potential difference

_____ 2. Resistance

_____ 3. Current

_____ 4. The electrical unit that's analogous to water pressure

_____ 5. The electrical unit that's analogous to flow rate

_____ 6. The electrical unit that's analogous to "a kink in the hose"

a. Ohms
b. watts
c. joules
d. amperes
f. volts
g. maxwells

Fill-In-The-Blank — (4 points each)

_____ 7. If the voltage of a circuit is increased (and all other variables kept constant), the current will (increase, decrease)

_____ 8. If the resistance in a circuit is increased, the current will (increase, decrease)

_____ 9. Write the formula for Ohm's Law. You may use any one of the three.

_____ 10. Write the symbol used in schematic diagrams for a cell (or battery). Do not use a letter or a picture.

_____ 11. Write the symbol used in schematic diagrams for resistance. Do not use a letter, or a Greek letter.

_____ 12. The direction of the current is from the ____ to the _____. (+, −)

12. Draw a pictorial or schematic diagram of a circuit that contains a battery (or cell), one resistor, a knife switch, ammeter, and voltmeter, in the box below. (5 points)
    a) Label each element in the circuit by writing the full name next to that element — no abbreviations (1 point each, 6 points)
    b) Assign a fictitious value for two of the three unknowns in the schematic diagram. (2 points)

13. Using Ohm's Law, solve for the last unknown using the values you assigned to your schematic diagram. **The three-step process must be observed.** (6 points)